NOTES:

1. MATERIALS:
   HOUSING: HIGH TEMP. THERMOPLASTIC, BLACK, UL 94V-0
   CONTACTS: 0.014 INCHES (0.35 MILLIMETERS) THICK PHOSPHOR BRONZE PLATED WITH
   150 MICROINCHES(3.81 MICROMETERS) MINIMUM THICK TIN LEAD IN SOLDER AREA.
   3 MICROINCHES (0.08 MICROMETERS) MINIMUM GOLD IN LOCALIZED PLATE AREA.
   ENTIRE CONTACTS PLATED WITH 50 MICROINCHES (1.27 MICROMETERS) MINIMUM THICK NICKEL.
   SHIELDED: 0.0098 INCHES(0.25 MILLIMETERS) THICK COPPER ZINC ALLOY PLATED WITH
   30 MICROINCHES (0.762 MICROMETERS) MINIMUM THICK NICKEL

2. JACK CAVITY CONFORMS TO FCC RULES AND REGULATIONS PART 68, SUBPART F

3. UNSPECIFIED TOLERANCE: .XX ±0.25[0.010]
   .X ±0.30[0.012]

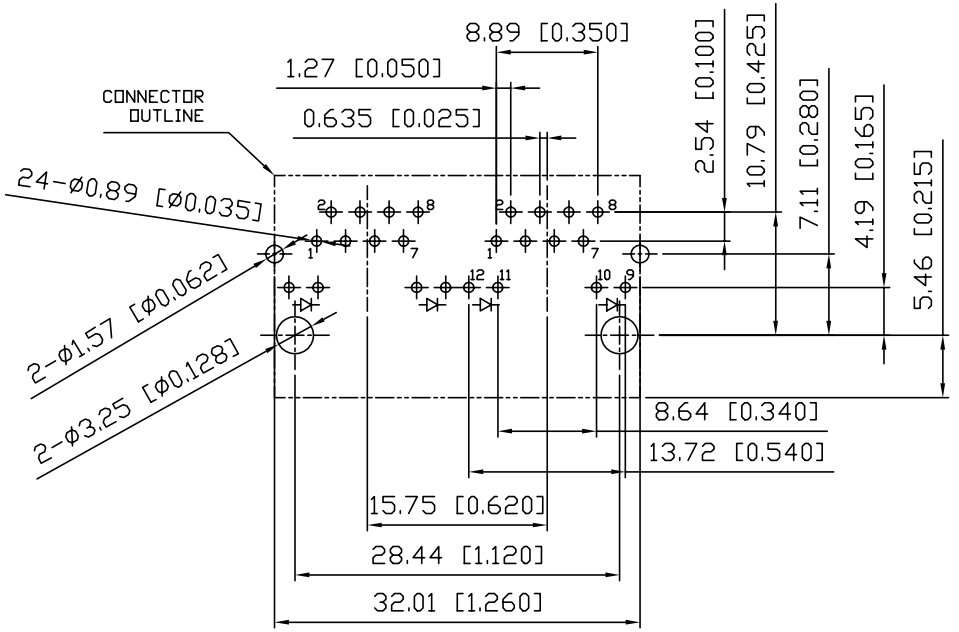

PCB LAYOUT / TOP VIEW
TOLERANCE .XX±0.05[0.002]

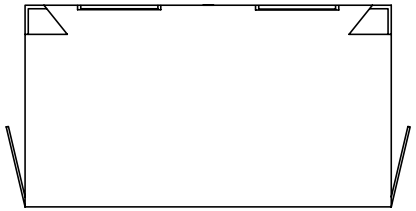

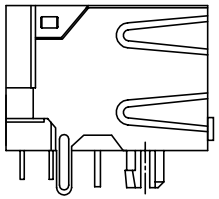

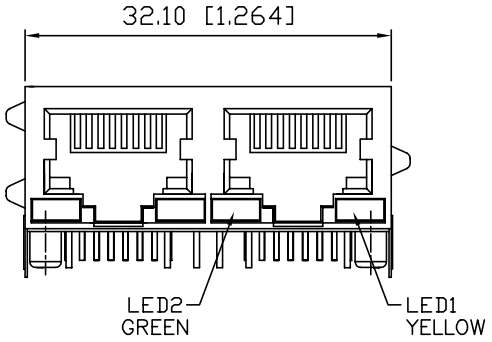

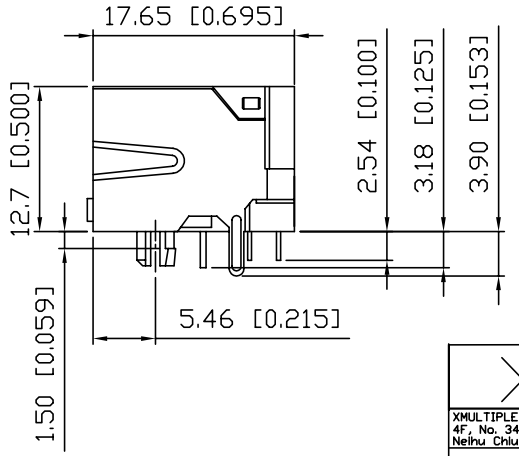

	CODE	LED 2 [LEFT]	LED 1 [RIGHT]
	0	BLOCKED	BLOCKED
	1	YELLOW	GREEN
	2	BLOCKED	GREEN
	3	YELLOW	BLOCKED
☆	4	GREEN	YELLOW
	5	GREEN	GREEN
	6	YELLOW	YELLOW
	7	OR/GR	OR/GR
	8	YE/GR	YE/GR
	9	OR/GR	YELLOW

XMULTIPLE — CONNECTING THE INFORMATION AGE

XMULTIPLE ASIA
4F, No. 347,Yang Guang St.,
Neihu Chiu , Taipei , Taiwan 11475

XMULTIPLE USA
543 Country Club Drive #B 128
Simi Valley, CA 93065

CUSTOMER/NO:

THIS DRAWING IS A CONTROLLED DOCUMENT.

DWG NO: XRJDB-S-02-8-8-4

TITLE: Stacked RJ45 Connectors, W/LED,8P,8C,Shielded, Thru Hole

DRAWN: TARA

PART NO: XRJDB-S-02-8-8-4

CHKD: JEFF

DIMENSIONS	SHEET	REV
mm[inch]	1 of 1	01

DATE: 16/02/04